PROPERTY OF ATI INDUSTRIAL AUTOMATION, INC.
NOT TO BE REPRODUCED IN ANY MANNER EXCEPT ON
ORDER OR WITH PRIOR WRITTEN AUTHORIZATION OF ATI.

Rev.	Description	Initiator	Date
03	Added Net Dimensions	ALH	8/7/08
04	Eco 7255; Dim from center to limits of connector block canged to 124mm from 132mm after connector block components changed.	LJH	9/4/2009

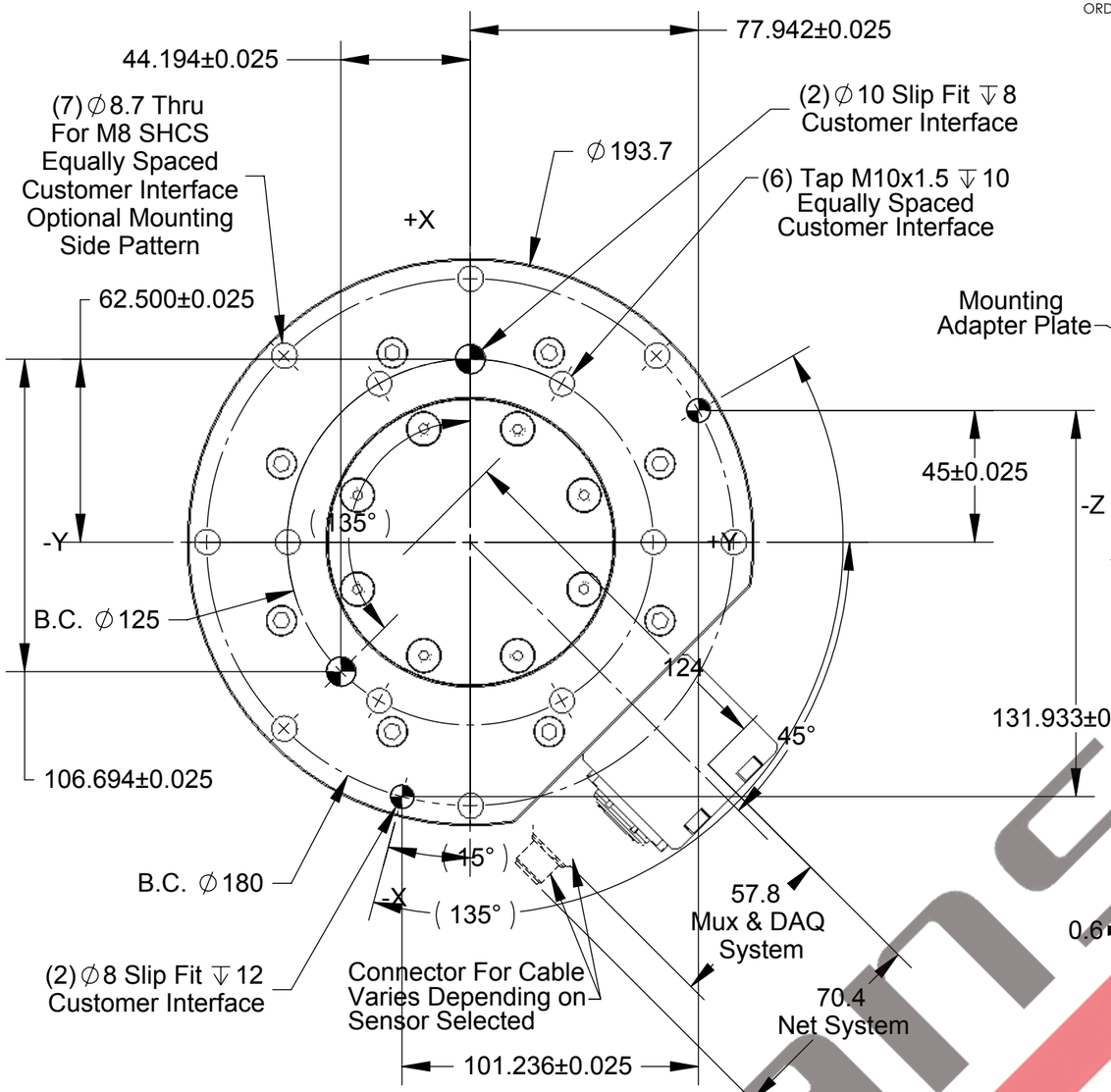

MOUNTING SIDE

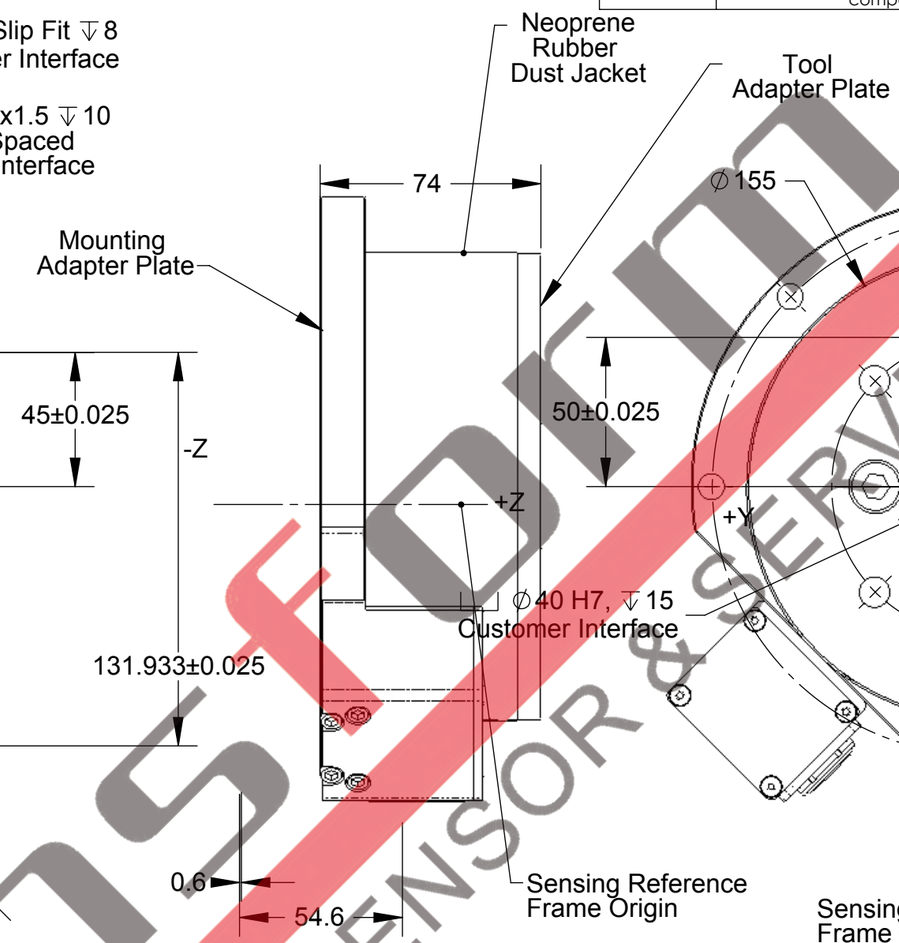

SIDE VIEW

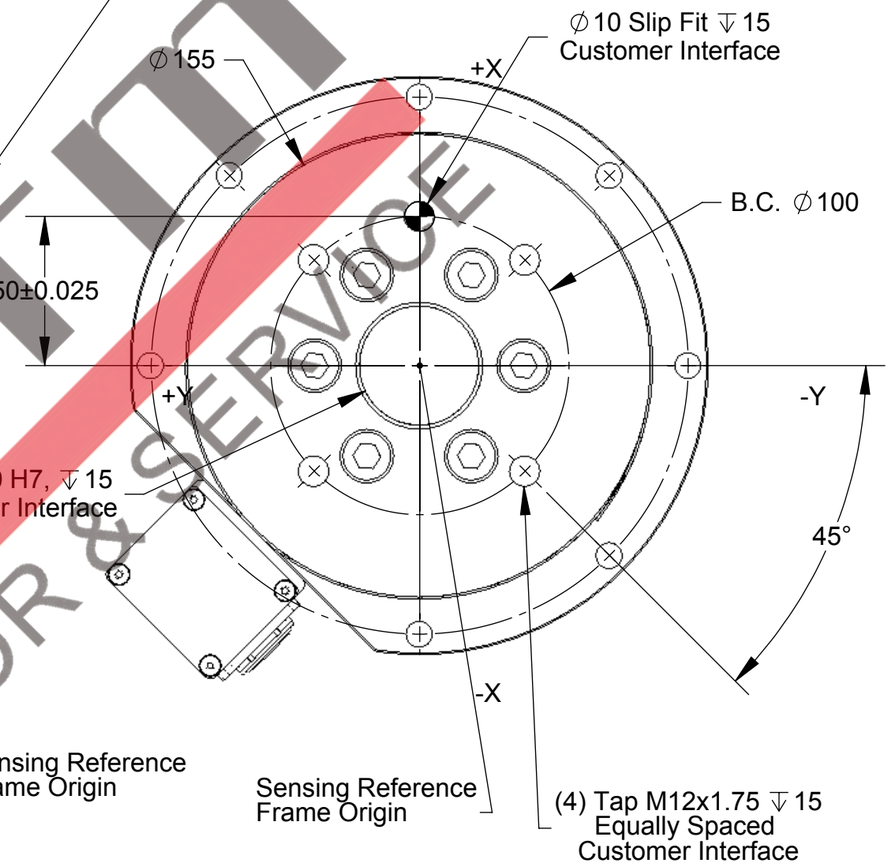

TOOL SIDE

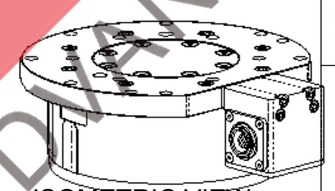

ISOMETRIC VIEW

Notes:
1. Material: Stainless Steel and Aluminum
2. Do not touch internal electronics or instrumentation.
   This could damage the transducer and will void warranty.
3. Sensing Reference Frame Origin at surface center of Tool Adapter.
4. For best accuracy, transducer must be mounted to surfaces rigid enough to support loads without deflection.

NOTES: UNLESS OTHERWISE SPECIFIED

DO NOT SCALE DRAWING.
DRAWN IN SOLIDWORKS.
ALL DIMENSIONS ARE IN MILLIMETERS.

3rd ANGLE PROJECTION

ATI INDUSTRIAL AUTOMATION
1031 Goodworth Drive, Apex, NC 27539, USA
Tel: +1.919.772.0115 Email: info@ati-ia.com
Fax: +1.919.772.8259 www.ati-ia.com
ISO 9001 Registered Company

DRAWN BY:	P.Sparrow, 2/16/06
CHECKED BY:	D.Norton, 2/17/06
WEIGHT LBS:	19
ASSEMBLY REF:	

TITLE: IP60 Theta Transducer

SCALE	SIZE	DRAWING NUMBER
1:2	B	9230-05-1263-04

PRODUCT RELEASE # DATE: SHEET 1 OF 1

Transform ADVANCED SENSOR & SERVICE